STATIONAIR TC

MODEL T206H

Specification & Description

Initial _____

Exhibit “A”

January 2012
Beginning With Serial # T20609038

Cessna
A Textron Company

STATIONAIR
TC

SPECIFICATION AND DESCRIPTION

EXHIBIT "A"

JANUARY 2012

BEGINNING WITH SERIAL # T20609038

Cessna Single Engine Piston Aircraft
2625 S. Hoover Rd.
Wichita, Kansas 67215

Copyright 2012 Cessna Aircraft Company

January 2012

INTRODUCTION

This document is published for the purpose of providing general information for the evaluation of design, performance and equipment of the Cessna Turbo Stationair. Should more information be required, please contact:

Cessna Aircraft Company
Single Engine Piston Aircraft
2625 S. Hoover Rd.
Wichita, Kansas 67215
1-800-4-CESSNA
www.se.cessna.com

This document supersedes all previous Specification and Description documents and describes only the Turbo Stationair Model T206H, its powerplant and equipment. Also included are the warranties applicable to the Turbo Stationair Model T206H aircraft, the Textron Lycoming TIO-540-AJ1A engine, the McCauley propeller and the OEM installed Bendix/King and Garmin avionics. In the event of any conflict or discrepancy between this document and the basic purchase agreement, the basic purchase agreement language shall govern. Due to the time span between the date of this Specification and Description and the scheduled delivery date of the aircraft, Cessna reserves the right to revise the “Specification” whenever occasioned by product improvements, government regulations or other good cause.

TABLE OF CONTENTS

Section — Page

1. General Description 3
   1.1 Certification 3
   1.2 Approximate Dimensions 3
   1.3 Design Weights and Capacities 6
2. Performance 7
3. Powerplant & Accessories 7
4. Stationair Equipment List 8
5. Instrument Panel 9
6. Electrical Power 10
7. Engine Indicating System (Electronic) 10
8. Environmental 11
9. Exterior 11
10. Exterior Lights 11
11. Flight Controls 11
12. Fuel System 11
13. Interior 12
14. Interior Lighting 12
15. Exterior Striping Options 13
16. Training 13
17. Limited Warranties 14
    17.1 Cessna's Limited Warranty - Single Engine Piston 14
    17.2 Aircraft Paint and Graphics - Single Engine Piston Aircraft 14
    17.3 Textron Lycoming Warranty (Limited) New Reciprocating Aircraft Engines 15
    17.4 McCauley Propeller Systems Standard Limited Warranty 16
    17.5 Bendix/King Equipment Retail Warranty Statement For Cessna Aircraft Company Single Engine Program 17
    17.6 Garmin Avionics Installed in Single Engine Aircraft 17

FIGURE I — STATIONAIR EXTERIOR DIMENSIONS 4
FIGURE II — STATIONAIR INTERIOR DIMENSIONS 5
FIGURE III — STATIONAIR INSTRUMENT PANEL 9

1. GENERAL DESCRIPTION

All information herein applies to the Turbo Stationair (Model T206H). The Turbo Stationair is an all-metal, six-place, high-wing, fixed gear, single-engine piston aircraft designed for general utility purposes.

1.1 Certification

The Model T206H is certified to the requirements of U.S. FAA Federal Aviation Regulation Part 23 through amendment 23-6, including day, night, VFR and IFR.

1.2 Approximate Dimensions

Overall Height . . . . . 9 ft 3.5 in (2.83m)
Overall Length . . . . . 28 ft 3 in (8.61m)

Wing

Span (overall) . . . . . 36 ft (10.97m)
Area . . . . . 174 sq ft (16.2sq m)

Cabin

Height (max) . . . . . 49.5 in (1.26m)
Width (trim to trim) . . . . . 44 in (1.12m)
Length (firewall to aft baggage bulkhead) . . . . . 145 in (3.68m)

Cabin Door

Height (front) . . . . . .41 in (1.04m)
Height (rear) . . . . . .39 in (1.00m)
Width (top) . . . . . .32.5 in (.83m)
Width (bottom) . . . . . .37 in (.94m)

Cargo Doors

Height (front) . . . . . .39.25 in (1.00m)
Height (rear) . . . . . .37.5 in (.95m)
Width (top) . . . . . .43 in (1.09m)
Width (bottom) . . . . . .40 in (1.02m)

1. GENERAL DESCRIPTION (Continued)

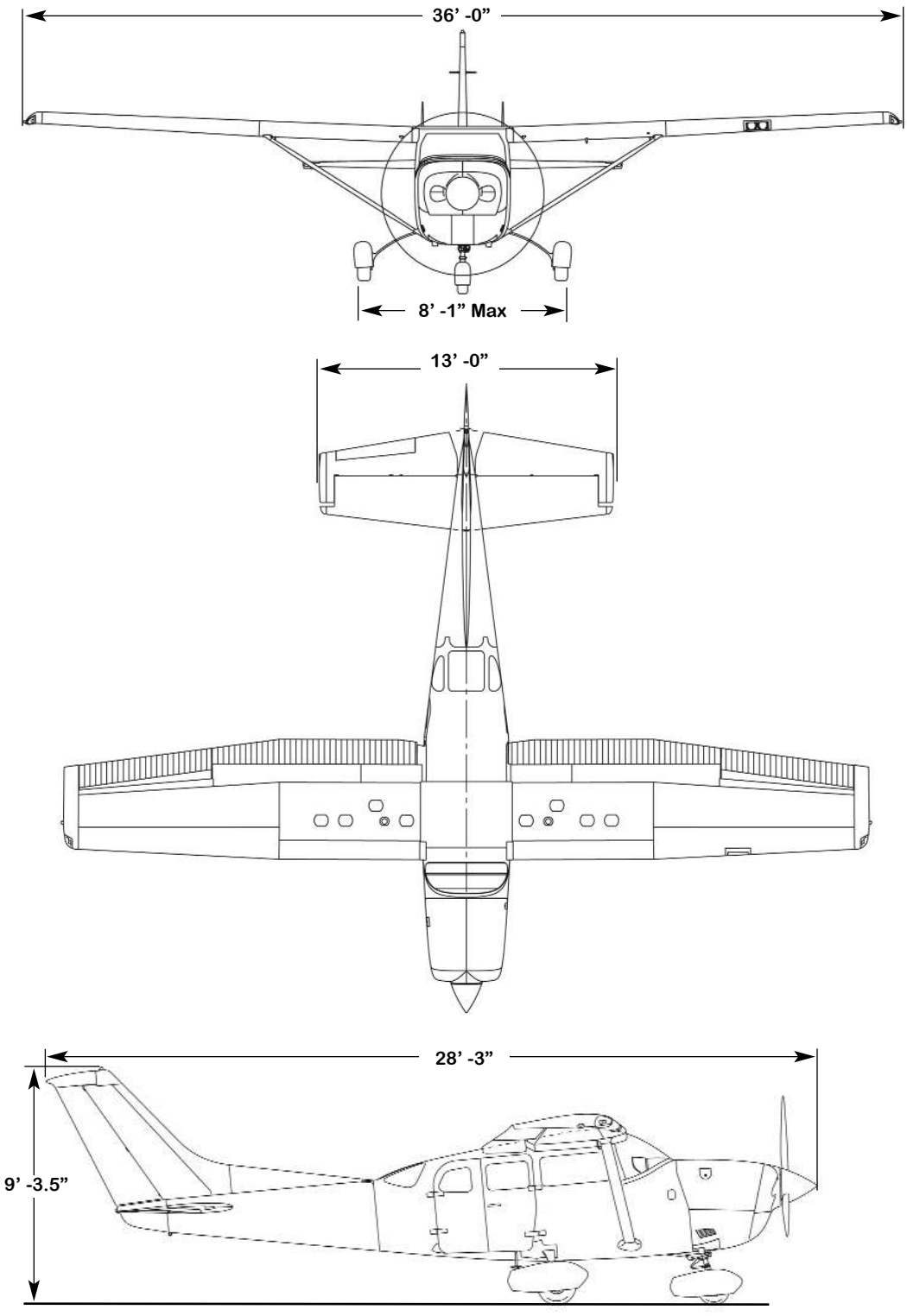

FIGURE I — STATIONAIR EXTERIOR DIMENSIONS

1. GENERAL DESCRIPTION (Continued)

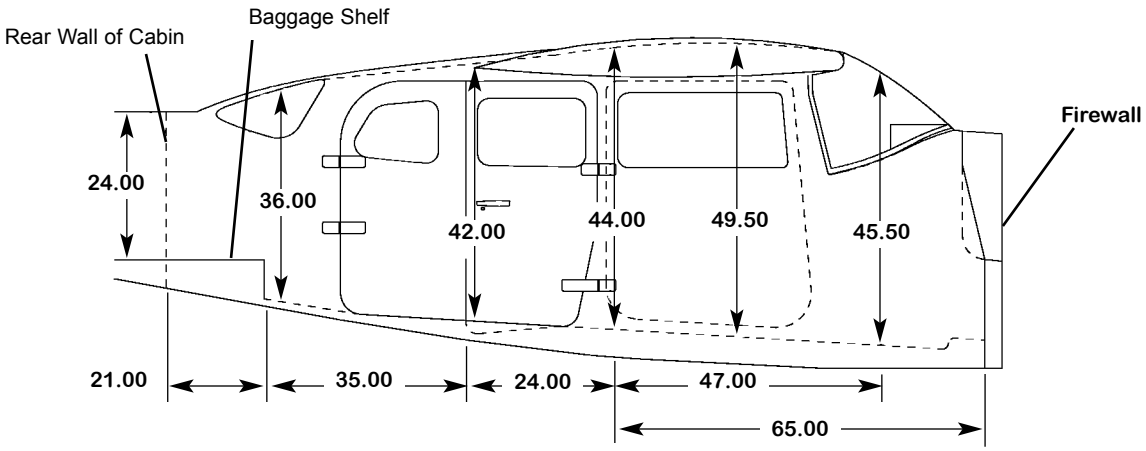

Cabin Height Dimensions

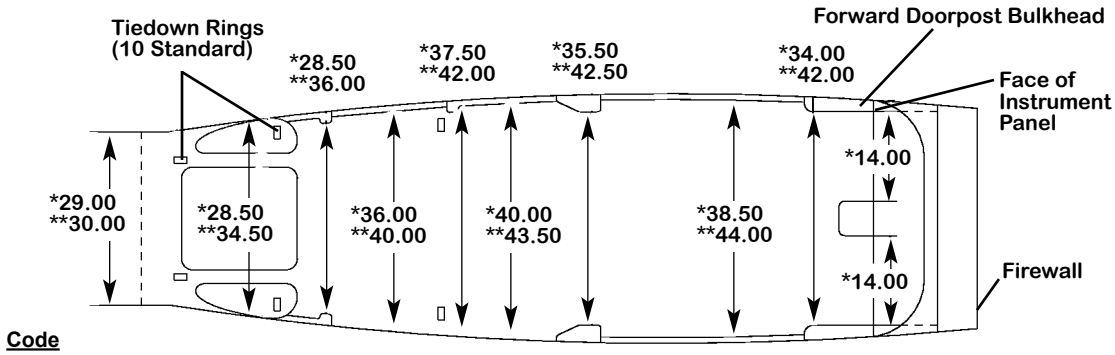

Cabin Width Dimensions

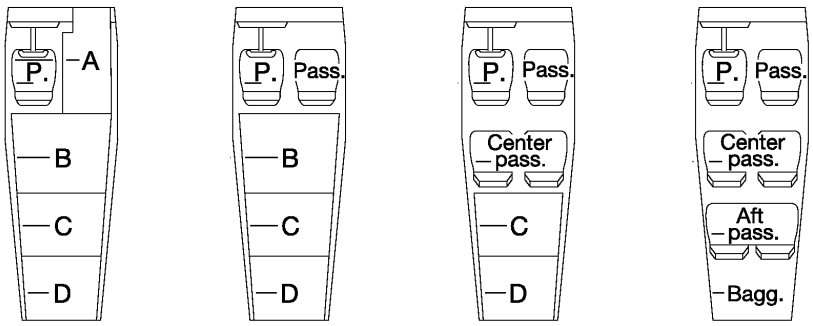

Cabin Floorplan Layout

FIGURE II — STATIONAIR INTERIOR DIMENSIONS

1. GENERAL DESCRIPTION (Continued)

1.3 Design Weight and Capacities

Maximum Ramp Weight	3,617 lbs (1,641 kg)
Maximum Takeoff Weight	3,600 lbs (1,633 kg)
Maximum Landing Weight	3,600 lbs (1,633 kg)
Standard Empty Weight	2,362 lbs (1071 kg)
Maximum Useful Load	1,255 lbs (570 kg)
Baggage Allowance	180 lbs (82 kg)
Fuel Capacity	
Total Capacity	92 gal (348.2 L)
Total Useable	87 gal (329.3 L)
Total Capacity each Tank	46 gal (174.1 L)
Total Useable Capacity each Tank	43.5 gal (164.6 L)
Oil Capacity	
Sump	8 qts (7.5 L)
Total Capacity	9 qts (8.5 L)

2. PERFORMANCE

All estimated performance data are based on airplane weights at 3,600 pounds; standard atmospheric conditions; level, hard surface, dry runways; and no wind. They are calculated values derived from flight tests conducted by Cessna Aircraft Company under carefully documented conditions and will vary with individual airplanes, pilots, and numerous other factors affecting flight performance.

Service Ceiling	27,000 ft
Takeoff Distance S.L. (Ground Roll)	910 ft
Takeoff Distance S.L. (To Clear 50ft. Obstacle)	1740 ft
Max Climb Rate S.L.	1,050 fpm
Max Speed (17,000 ft)	178 kts / 205 mph
Max Range and Endurance	703 nm / 6.3 hrs
Cruise Speed (75% pwr at 20,000 ft)	164 kts / 189 mph
Cruise Range and Endurance (75% pwr at 20,000 ft)	559 nm / 3.6 hrs
Landing Distance (Ground Roll)	735 ft
Landing Distance (To Clear 50 ft Obstacle)	1395 ft

3. POWERPLANT & ACCESSORIES

- Lycoming TIO-540-AJ1A Engine
- 310 HP @2500 RPM
- Certified for 100LL & 100 Fuel
- Turbocharging System (Fully Automatic)
- Fuel Injection System
- Tubular Steel Engine Mount
- Bed Dynafocal Engine Mounting System
- Engine Driven Backup Vacuum Pump
- Automatic Alternate Engine Air
- Oil Cooler
- Rigid - Mounted Cowling
- Manual Cowl Flaps
- Induction Air Filter
- Full Flow Oil Filter
- Throttle Control
- Vernier Mixture Control
- Vernier Propeller Control
- Dual Ignition System, Shielded Magneto
- Engine Exhaust Muffler
- McCauley Constant Speed, 3 Blade Metal Propeller with De-ice Boots
- Propeller Governor
- Propeller Spinner, Polished
- Electric Starter

4.STATIONAIR EQUIPMENT LIST

The following list of equipment is included on the standard aircraft and it does not reflect optional equipment.

NAV III Avionics Package

- GMA-1347 Digital Audio Panel with Marker Beacon/Intercom
- GTX-33 Transponder-Mode S w-TIS
- GIA-63W NAV/COM/GPS/WAAS with GS #1
- GIA-63W NAV/COM/GPS/WAAS with GS #2
- GDU-1044B Primary Flight Display (PFD)
- GDU-1044B Multi-Function Display (MFD)
- GEA-71 Engine/Airframe Computer
- GRS-77 AHRS
- GDC-74A Air Data Computer with OAT Probe
- GMU-44 Magnetometer
- Garmin SafeTaxi & FliteCharts
- GFC-700 Autopilot
  - Go-Around Switch
  - Electric Trim
  - A/P Disconnect
  - Control Wheel Steering Button
- GDL-69A Flight Information System (FIS) with XM Radio
- WX-500 Stormscope
- Electronic Checklists
- ME406 Two Frequency Emergency Locator Transmitter
- Emergency Locator Transmitter Remote Mounted Switch
- Backup Attitude Gyro, Altimeter and Airspeed Indicator
- Control Wheel Push-To-Talk Switch-Pilot/Copilot
- Mic & Phone Jacks-Pilot/Copilot/Passengers
- Auxiliary Stereo Input Jack
- Antennas:
  - Marker Beacon Antenna
  - Transponder Antenna
  - VHF/GPS Antenna (2)
  - XM Antenna
  - NAV Antenna
  - Emergency Locator Transmitter External Antenna
  - Stormscope Antenna
- Pitot System - Heated
- Static System
- Hand Held Microphone
- Alternate Static Source
- Compass

5. INSTRUMENT PANEL

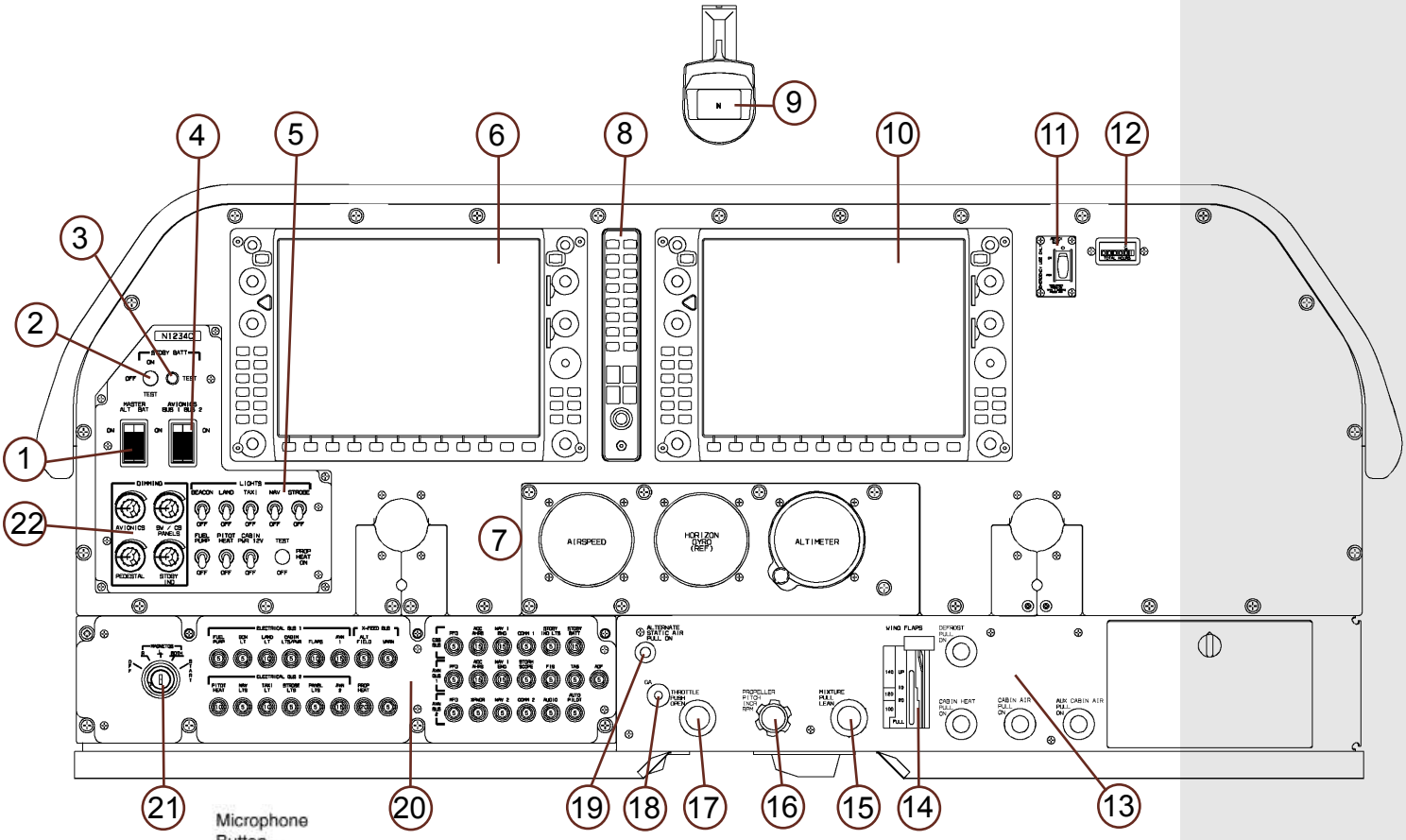

1. MASTER Switch (ALT and BAT)
2. STBY BATT Switch
3. STBY BATT Test Annunciator
4. AVIONICS Switch (BUS 1 and BUS 2)
5. Electrical Switches
6. GDU-1044B Primary Flight Display
7. Backup Attitude Gyro, Airspeed & Altimeter Indicator
8. GMA-1347 Audio Panel
9. Backup Compass
10. GDU-1044B Multi-Function Display
11. ELT Remote Switch/Annunciator
12. Flight Hour Recorder (Hobbs Meter)
13. Cabin Air Control
14. Wing Flap Switch Lever And Position Indicator
15. Mixture Control
16. Propeller Control Knob
17. Throttle (With Friction Lock)
18. Go-Around Switch
19. ALT Static Air Valve Control
20. Electrical and Avionics Circuit Breakers
21. Magnetos/Start Switch, Key Operated
22. Dimming Panel

FIGURE III — STATIONAIR INSTRUMENT PANEL

6. ELECTRICAL POWER

- Alternator, 28 Volt, 95 Amp
- Battery, 24 Volt, 10.0 AH (1 hr rate), Manifold Type
- Standby Battery, 24 volt, 6.2 AH (1 hr rate), Sealed Type
- Standby Battery Controller
- Electrical Circuit Panel
  - Alternator/Battery Master Switch
  - Split Avionics Master Switch
  - Circuit Breakers, Electrical
  - Switches, Electrical
- Electrical J-Box
  - Alternator Control Unit
  - Battery Current Sensor
  - Ground Service Receptacle
  - Starter Relay
  - Alternator Relay
  - Battery Relay
  - Ground Power Relay
  - Bus Circuit Protection
- Cabin Power Jack -12 Volt (fore & aft)
- Propeller De-Ice Timer
  - Propeller Heat

7. ENGINE INDICATING SYSTEM (ELECTRONIC)

- Ammeters
- Voltmeters
- Vacuum
- Manifold Pressure
- Oil Pressure and Temperature
- Tachometer - Hour Recorder
- Fuel Flow (GPH)
- LH/RH Fuel Quantity
- CHT - Cylinder Head Temperature
- EGT - Exhaust Gas Temperature
- TIT - Turbine Inlet Temperature
- Single Engine Driven Vacuum Pump System
- Annunciation – Caution and Warning Alerts (PFD)

8. ENVIRONMENTAL

- Windshield Defroster, Pilot
- Ventilator, Adjustable (6 places)
- Heating System, Shrouded Muffler with Firewall Valve
- Insulation / Soundproofing
- Carbon Monoxide Detection System
- Precise Flight Oxygen System - Consists of a microphone mask and A5 flowmeter and oxymizer cannula for the pilot, and standard mask, A5 flowmeter, and oxymizer cannulas for each passenger position.
- 6 place oxygen equipment bag

9. EXTERIOR

- Epoxy Corrosion Proofing, All Structure
- LH Door, Pilot with Hinged Window, Lock and Key
- RH Cargo Door
- Openable Window – RH (Copilot)
- Rear Window
- All Windows Tinted
- Fixed Landing Gear
- White Polyurethane Exterior Paint
- Refueling Steps and Handles, Wing Struts and Fuselage
- Fixed Cabin Entrance Steps
- Tie Down Rings, LH/RH Wing & Tail
- Tube Type Tires
  - Nose – 5.00 X 5
  - Mains - 6.00 X 6
- Conical Camber Wing Tip
- Strut Braced, Camber Lift Wings
- Static Wicks

10. EXTERIOR LIGHTS

- LED Ground Recognition Beacon - Vertical Tail
- LED Navigation, LH/RH Wing Tip & Tail
- Navigation Light Detectors, LH/RH
- Wing Tip Strobe, LH/RH
- Dual Wing LED Landing and Taxi Lights with integrated Pulse Recognition Technology
- Underwing Courtesy, LH and RH

11. FLIGHT CONTROLS

- Hydraulic Brakes, Toe-Operated
- Parking Brake
- Stainless Steel Control Cables
- Dual Flight Controls - Aileron/Elevator/Rudder
- Leather Wrap Control Wheels, All Purpose Pilot/Copilot
- Pilot Control Wheel Switches
  - Pitch Trim
  - AP Disconnect
  - Control Wheel Steering Button
- Go-Around Switch
- Elevator Trim - Manual/Electric
- Rudder Trim - Manual
- Electrical Preselect - Flaps
- Steerable Nose Wheel
- Aileron and Elevator Control Lock

12. FUEL SYSTEM

- Electric Auxiliary Fuel Pump
- Engine Driven Fuel Pump
- Integral Wet Wing Fuel Tanks, 87 Gal. Usable
- Fuel Selector Valve, Left/Both/Right/Off
- Fuel Strainer, Incorporated with Fuselage Quick Drain
- Fuel Tank Quick Drain, 5 per wing
- Fuel Sampler Cup
- Fuel Vapor Return System

13. INTERIOR

- High Contrast Sport Interior Theme - Light Taupe and Black
- Light Taupe Leather Seating Surface with Black Perforated (Embossed) Leather Inserts on Seat Cushion and Seat Back
- Door Panel, Upper Sidewall Accent - Black Perforated (Embossed) Leather
- Door, Lower Sidewall, Kick Panel - Black Kydex
- Vinyl Grip Flooring in Crew Area
- Carpeting in Passenger Area
- Passenger Cup Holders
- Jepp Map Storage Console with Cup Holders
- Approach Plate Holder, Pilot Control Wheel
- Armrests - Pilot & Copilot Doors/Passenger Side Panels
- Amsafe Inflatable Seat Belts & Shoulder Harness STC, Inertia Reel, Pilot, Copilot, Passenger 3 & 4 Seats
- Pilot and Copilot Seats
  - Adjustable Fore and Aft
  - Reclining Backs
  - Vertical Adjustment
- Rear, Passenger 3 & 4 Seats (Removable)
  - Adjustable Fore and Aft
  - Reclining Backs
- Rear, Passenger 5 & 6 Bench Seat (Removable)
  - Flat Folding
- Pilot's Check List
- Pilot's Operating Handbook
- Fire Extinguisher, Hand Held
- Instrument Panel Glareshield
- Clothes Hanger Bar
- Metal Instrument Panel, with Removable Stby Instr. Subpanel
- Map/Glove Compartment
- Baggage Net
- Radio Call Plate
- Map & Storage Pockets
- Cabin Door Scuff Plates
- Rosen Sun Visors, Pilot & Copilot
- Tow Bar

14. INTERIOR LIGHTING

- LED Pilot/Copilot Cabin Overhead LED Lights
- LED Passenger Overhead Lights
- Interior Lights Dimming Controls
- Map Light, Pilot Control Wheel
- Sub-Panel Lighting (LED Backlighted)
  - Flaps
  - Throttle
  - Mixture
  - Propeller
  - Environmental Controls (Air and Heat)
- Switch Panel Lighting (LED Backlighted)
  - Avionics and Master Switches
  - Dimming Rheostats
  - Landing, Taxi and Nav Switches
  - Beacon, Strobe, Fuel Pump, Pitot Heat
  - 12 Volt Cabin Power
  - Standby Battery Switch
  - Circuit Breakers
  - Ignition / Start Switch
- LCD Lighted Glass Panel Displays:
  - Electronic Flight Instruments
  - Electronic Avionics Instruments
  - Electronic Engine Instruments
- Audio Panel Bezel (Backlighted)
- Radio Call Plate (Backlighted)
- Compass Internally Lighted
- Standby Attitude, Altimeter, Airspeed Internally Lighted

15. EXTERIOR STRIPING OPTIONS

- Distinctive exterior styling in a variety of colors is provided.

16. TRAINING

- Cessna will offer one G1000 training course at no additional charge and one G1000 ground school course for a second person at no additional charge, with purchase of a new aircraft. This offer is valid for 12 months after aircraft delivery.

17. LIMITED WARRANTY

17.1 CESSNA'S LIMITED WARRANTY - SINGLE ENGINE PISTON AIRCRAFT

Cessna warrants the aircraft and all parts included therein to be free from defects in material and workmanship under normal use and service for a period of twenty-four (24) months after the Warranty Start Date, except as hereafter noted. Engines, engine part accessories, avionics, batteries, propellers and governors are specifically excluded from this warranty. Paint and graphics warranties are addressed separately.

Spare parts sold by Cessna, excluding engines, engine part accessories, avionics, batteries, propellers and governors are warranted for six (6) months after installation, except as hereafter noted.

Cessna's obligation under this warranty is limited to repairing or replacing, at its option, with exchange, overhauled, or new parts, items found defective by Cessna's examination which are returned at the owner's expense within the applicable twenty-four (24) or six (6) month period to any Cessna Service Station.

A new warranty period is not established for replacement parts. Replacement parts are warranted only for the remainder of the applicable twenty-four (24) or six (6) month original warranty period.

The repair or replacement of defective parts under this warranty will be made without charge to the owner for parts and labor for removal, installation and/or actual repair, except that the owner shall pay all import duties and sales and use taxes on replacements and repairs.

This limited warranty does not apply to parts subjected to misuse, negligence, improper installation, accident, alteration; repairs not authorized by Cessna; normal maintenance services (cleaning, control rigging, brake and other mechanical adjustments, maintenance inspections, etc.); replacement of service items (light bulbs, brake linings, filters, hoses, tires, cowl mounts, etc.); or to normal deterioration of soft trim or appearance items (paint, upholstery, rubber-like items, etc.) due to corrosion, wear and exposure.

WITH THE EXCEPTION OF THE WARRANTY OF TITLE, TO THE EXTENT ALLOWED BY APPLICABLE LAW, THIS WARRANTY IS EXPRESSLY IN LIEU OF ANY OTHER WARRANTIES, EXPRESSED OR IMPLIED IN FACT OR BY LAW, INCLUDING ANY IMPLIED WARRANTY OF MERCHANTABILITY OR FITNESS FOR A PARTICULAR PURPOSE. THE REMEDIES OF REPAIR OR REPLACEMENT AS ABOVE SET FORTH ARE THE ONLY REMEDIES UNDER THIS WARRANTY. CESSNA DISCLAIMS ANY OBLIGATION OR LIABILITY WHETHER IN CONTRACT OR IN TORT (AND WHETHER FOR NEGLIGENCE, STRICT LIABILITY, PRODUCT LIABILITY OR OTHERWISE), INCLUDING LOSS OF USE OF THE PRODUCT WARRANTED, LOSS OF TIME, INCONVENIENCE, COMMERCIAL LOSS OR ANY OTHER DIRECT, CONSEQUENTIAL, SPECIAL OR INCIDENTAL DAMAGES. THIS WARRANTY IS IN LIEU OF ANY OTHER OBLIGATION OR LIABILITY OF CESSNA OF ANY NATURE WHATSOEVER BY REASON OF THE MANUFACTURE, SALE OR LEASE OF SUCH AIRCRAFT PRODUCTS AND CESSNA NEITHER ASSUMES NOR AUTHORIZES ANYONE TO ASSUME FOR IT ANY OTHER OBLIGATION OR LIABILITY IN CONNECTION WITH SUCH AIRCRAFT PRODUCTS. COMPLIANCE WITH THIS LIMITED WARRANTY MAY BE AFFECTED IF EXPORT LICENSES ARE REQUIRED TO BE REQUESTED AND APPROVED BEFORE SPARE PARTS CAN BE SHIPPED TO CERTAIN FOREIGN COUNTRIES.

17.2 AIRCRAFT PAINT AND GRAPHICS– SINGLE ENGINE PISTON AIRCRAFT

Cessna endeavors to select and use high quality polyurethane paints from the leading manufacturers. Polyurethane paints and graphics are used because of their high gloss characteristics and ability to withstand dramatic temperature and pressure changes. The paint on your new aircraft will maintain its high gloss characteristics for an extended period of time provided it is cared for properly.

The painted exterior surfaces require an initial curing period which may be as long as ninety (90) days after the finish is applied. During this curing period, some precautions should be taken to avoid damaging the finish or interfering with the curing process. The finish should be cleaned only by washing with clean water and mild soap, followed by a water rinse and drying with a cloth or chamois. Do not use polish or wax, which would exclude air from the surface, during this ninety (90) day curing period. Once the finish has cured completely, it may be waxed with a good automotive wax, but power buffing should be avoided to prevent damage to the paint surface.

Normal paint maintenance will include but is not limited to; touchup of abrasion and wear of the paint on screws heads, around access panels, the radome, wing leading edges, vertical and horizontal stabilizer leading edges, windshield retainers and other leading edge surfaces including parts on the landing gear subject to damage or erosion from airborne particles. Proper maintenance includes keeping surfaces clean, polished, and touching up chipped or eroded areas to prevent further damage and corrosion.

Paint and graphics warranty applies only to defects in material and workmanship for a period of one (1) year from the Warranty Start Date. Deterioration of paint and graphics due to normal wear, exposure, or improper care is not covered by the warranty. If proper paint maintenance procedures have been followed and paint peeling, blistering or cracking is evident in areas other than immediate leading edge surfaces, warranty consideration may be requested thorough a Cessna Service Station.

17. LIMITED WARRANTY (Continued)

Generally speaking, warranty repair of paint is confined to a limited surface area. Workmanship or material defects can usually be identified to localized surface areas that were improperly prepared prior to paint application, or to areas where the paint or subsurface primer has been improperly applied.

Complete strip and repaint of an entire airplane can ONLY be authorized if there is evidence of paint defects on several major surface areas of the aircraft. Contact your Cessna Field Service Engineer concerning paint defects on any major surface of an aircraft.

17.3 Textron Lycoming Warranty (Limited) New Reciprocating Aircraft Engine

What Textron Lycoming Promises You

Engine Model Aircraft Model
IO-360-L2A Cessna-172R, 172S
IO-540-AB1A5 Cessna-182T
IO-540-AC1A5 Cessna-206H
TIO-540-AK1A Cessna-T182T
TIO-540-AJ1A Cessna-T206H

Textron Lycoming warrants the above listed new reciprocating engine models sold by it to be free from defects in material and workmanship for a period of twenty-four (24) months after aircraft delivery to the original retail purchaser or first user. The date of first operation must not exceed two (2) years from the date of shipment from Textron Lycoming.

Textron Lycoming's obligation under this warranty shall be limited to its choice of repair or replacement, on an exchange basis, of the engine or any part of the engine, when Textron Lycoming has determined that the engine is defective in material or workmanship. Such repair or replacement will be made by Textron Lycoming at no charge to you. Textron Lycoming will also bear the cost for labor in connection with the repair or replacement as provided in Textron Lycoming's then current Removal and Installation Labor Allowance Guidebook.

Any engine or part so repaired or replaced will be entitled to warranty for the remainder of the original warranty period.

YOUR OBLIGATIONS

The engine must have received normal use and service. You must apply for warranty with an authorized Textron Lycoming distributor within 30 days of the appearance of the defect in material or workmanship.

Textron Lycoming's warranty does not cover normal maintenance expenses or consumable items, the obligations on the part of Textron Lycoming set forth above are your exclusive remedy and the exclusive liability of Textron Lycoming. This warranty allocates the risk of product failure between you and Textron Lycoming, as permitted by applicable law.

Textron Lycoming reserves the right to deny any warranty claim if it reasonably determines that the engine or part has been subject to accident or used, adjusted, altered, handled, maintained, or stored other than as directed in your operator's manual, or if non-genuine Textron Lycoming parts are installed in or on the engine and are determined to be a possible cause of the incident for which the warranty application is filed.

Textron Lycoming may change the construction of engines at any time without incurring any obligation to incorporate such alterations in engines or parts previously sold.

THIS LIMITED WARRANTY IS EXCLUSIVE AND IN LIEU OF ALL OTHER WARRANTIES AND REPRESENTATIONS, EXPRESS OR IMPLIED OR STATUTORY, WHETHER WRITTEN OR ORAL, INCLUDING BUT NOT LIMITED TO ANY WARRANTY OF MERCHANTABILITY OR FITNESS FOR ANY PARTICULAR PURPOSE, AND ANY IMPLIED WARRANTY ARISING FROM ANY COURSE OF PERFORMANCE OR DEALING OR TRADE USAGE. THIS WARRANTY IS ALSO IN LIEU OF ANY OTHER OBLIGATION, LIABILITY, RIGHT, OR CLAIM, WHETHER IN CONTRACT OR IN TORT, INCLUDING ANY RIGHT IN STRICT LIABILITY IN TORT OR ANY RIGHT ARISING FROM NEGLIGENCE ON THE PART OF TEXTRON LYCOMING, AND TEXTRON LYCOMING'S LIABILITY ON SUCH CLAIM SHALL IN NO CASE EXCEED THE PRICE ALLOCABLE TO THE ENGINE OR PART WHICH GIVES RISE TO THE CLAIM.

LIMITATION OF LIABILITY IN NO EVENT, WHETHER AS A RESULT OF A BREACH OF WARRANTY, CONTRACT, OR ALLEGED NEGLIGENCE, SHALL TEXTRON LYCOMING BE LIABLE FOR SPECIAL OR CONSEQUENTIAL OR ANY OTHER DAMAGES, INCLUDING BUT NOT LIMITED TO LOSS OF PROFITS OR REVENUES, LOSS OF USE OF THE ENGINE, OR COST OF A REPLACEMENT.

No agreement varying this warranty or Textron Lycoming's obligations under it will be binding upon Textron Lycoming unless in writing signed by a duly authorized representative of Textron Lycoming.

Cessna Model Aircraft Only
Textron Lycoming Engines
652 Oliver Street
Williamsport, Pennsylvania 17701
(570) 323-6181
www.lycoming.textron.com
Original Engine Installation Only
Effective 2000

17. LIMITED WARRANTY (Continued)

17.4 McCauley Propeller Systems Standard Limited Warranty

McCauley Propeller Systems, a Division of Cessna Aircraft Company, Wichita, Kansas, U.S.A., expressly warrants new and remanufactured products produced and sold by McCauley to be free from defects in material and workmanship under normal use and service for a period of thirty-six (36) months after delivery to the original retail purchaser or until the expiration of the maximum hours of use or calendar limits for overhaul published by McCauley for the subject product, whichever occurs first.

McCauley's obligation under this limited warranty is limited to repairing or replacing, at its sole option, any propeller, propeller parts, governor or governor parts determined by McCauley to have been defective and which are properly returned by the owner, with a written statement describing the alleged defect, to any McCauley Authorized Service Center authorized to service the individual McCauley product. The repair or replacement of defective parts will be made without charge to the owner for parts, or labor for removal and installation, except export/import duties, and/or sales or use taxes, if any which are solely the owner's responsibility. McCauley will warrant a part replaced pursuant to this limited warranty under the same terms as the original part for the remainder of he applicable warranty period of the original part. This limited warranty is not intended to and does not cover the costs of normal maintenance of overhaul.

In addition, McCauley will repair or replace, at its option, any propeller, propeller parts, governor, or governor parts requiring replacement due to manufacturing defect if found at or before the first recommended overhaul interval as described in McCauley published service information. This first overhaul coverage does not include labor, standard overhaul replacement parts, parts repairable via published service information (replating, painting, etc.), other costs associated with the propeller or governor overhaul, or export/import duties, and/or sales or use taxes, nor does it apply to defects found after McCauley published overhaul hour or calendar limits. The provisions of this limited warranty do not apply to: any McCauley parts which have been subject to misuse, negligence or accident or which have been repaired or altered in any way that, in the sole judgment of McCauley, adversely affects their performance, stability or reliability; to normal maintenance services (such as cleaning, mechanical adjustments and maintenance inspections); to the replacement of service items made in connection with normal maintenance; to normal deterioration of soft trim and appearance items (such as paint and rubber-like items) due to wear and exposure; to propellers, governors or parts found defective beyond the McCauley recommended overhaul period; or to parts which have been improperly installed by entities other than McCauley and/or McCauley Authorized Service Centers.

The McCauley limited warranty is void on any new or remanufactured product installed, without McCauley's prior written approval, on a non-type certificated engine, or on any engine which has received an overhaul or modification which is not approved by the engine manufacturer and that results in a change to the vibratory environment of the engine such as, but not limited to, an alteration of horsepower, operating RPM, crankshaft damper configuration, compression ratio, magneto timing, camshaft design, or any other overhaul or modification not expressly approved by the original engine manufacturer. The McCauley limited warranty is also void on any McCauley product shipped new from the factory or distributor in disassembled state, then later re-assembled by an unauthorized party. Parties authorized to reassemble factory-new product must have specific written permission from McCauley to do so, otherwise all McCauley warranty on the affected unit is void. No McCauley warranty coverage is offered for leakage on product assembled outside McCauley, regardless of the assembling party.

To the extent allowed by applicable law, **THIS WARRANTY IS EXPRESSLY IN LIEU OF ANY OTHER WARRANTIES, EXPRESSED OR IMPLIED IN FACT OR BY LAW, INCLUDING ANY IMPLIED WARRANTY OF MERCHANTABILITY OR FITNESS FOR A PARTICULAR PURPOSE. THE REMEDIES OF REPAIR OR REPLACEMENT SET FORTH HEREIN ARE THE ONLY REMEDIES UNDER THIS LIMITED WARRANTY. McCAULEY DISCLAIMS ANY OBLIGATION OR LIABILITY, WHETHER IN CONTRACT OR IN TORT , INCLUDING LOSS OF USE OF THE PRODUCT WARRANTED, LOSS OF TIME, INCONVENIENCE, LOSS OF PROFITS, COMMERCIAL LOSS, OR ANY OTHER DIRECT, CONSEQUENTIAL, SPECIAL, OR INCIDENTAL DAMAGES. THIS WARRANTY IS IN LIEU OF ANY OBLIGATION OR LIABILITY ON THE PART OF McCAULEY TO ANYONE OF ANY NATURE WHATSOEVER BY REASON OF THE MANUFACTURE, SALE, LEASE, OR USE OF THE WARRANTED PRODUCTS AND McCAULEY NEITHER ASSUMES NOR AUTHORIZES ANYONE TO ASSUME FOR IT ANY OTHER OBLIGATION OR LIABILITY IN CONNECTION WITH SUCH WARRANTED PRODUCTS. THE UNITED NATIONS CONVENTION ON CONTRACTS FOR THE INTERNATIONAL SALE OF GOODS, 1980, AND ANY SUCCESSOR THERETO, IS EXPRESSLY EXCLUDED FROM THIS WARRANTY.**

Issued 9/1/2003

17. LIMITED WARRANTY (Continued)

17.5 Bendix/King Equipment Retail Warranty Statement For Cessna Aircraft Company Single Engine Program

A. General Aviation Avionics products manufactured by Honeywell under the brand name Bendix/King (collectively referred to herein as "Honeywell") are warranted against defects in design, material, or workmanship caused by Honeywell or its authorized agent(s) for the warranty period as defined in Paragraph (B) of this statement, which occur under normal and intended use and service, subject to all of the qualifications and conditions hereinafter stated.

B. The warranty term for new product(s) installed on new aircraft shall be twenty-four (24) months from delivery to the original retail purchaser or first user. Cessna to provide warranty start date information. C. Any product Honeywell finds to be in violation of the warranty as set out in Paragraph (A) hereof, at the option of Honeywell, shall be repaired, replaced, or exchanged in accordance with the following procedures:

1. Products shall be returned to any authorized Honeywell Service Center or Honeywell Regional Product Support Repair/Overhaul Facility, with trans port harges prepaid.

2. After correction, the products shall be returned to the purchaser with surface transportation charges prepaid.

3. The risk of loss or damage to all products in tran sit shall be borne by the party initiating the trans portation of such products unless the purchaser makes a request for specific mode of transportation. In such case, the risk of loss and the cost of ship ment shall be borne by the purchaser. All items repaired or replaced hereunder shall be warranted for the unexpired portion of the original warranty period.

D. This warranty specifically excludes defects that Honeywell determines to be the result of any or all of the following:

1. Abuse, accident, or misuse;

2. Contamination, negligence, tampering, or improper storage or maintenance;

3. Repair or attempted repair by unauthorized per sons or use of non-Honeywell or unauthorized repair or replacement parts;

4. Products not installed by an authorized Honeywell Installation Facility in accordance with the appropri ate installation manual.

E. The warranty as set out in Paragraph (A) is the only warranty for Honeywell products and is in lieu of all other warranties expressed or implied, including the implied warranties of merchantability and fitness for a particular purpose that are herewith expressly excluded and disclaimed.

F. The remedies as set out in Paragraph (C) hereof state the entire liability of Honeywell and constitute the sole and exclusive remedy of the purchaser. Honeywell shall not be liable for any other claim, loss, or damage, including, but not limited to, incidental, consequential, or other kinds of damages whether based on contract, tort, negligence, or other theory of product liability.

G. Honeywell reserves the right to make design changes, additions to, and improvements in its products without the obligation to install same in products previously manufactured.

THIS IS A LIMITED WARRANTY

Honeywell

23500 W. 105th Street

Olathe, Kansas 66061

17.6 Garmin Avionics Installed in Single Engine Aircraft

Aircraft OEM-Installed Avionics 2-Year Limited Warranty Policy

This GARMIN Product is warranted to be free from defects in materials or workmanship for two years from the date of warranty activation. Within this period, GARMIN International, Inc. will at its sole option, repair or replace any components which fail in normal use. Such repairs or replacement will be made at no charge to the customer for parts or labor, provided that the customer shall be responsible for any transportation cost. This warranty does not cover failures due to abuse, misuse, accident or unauthorized alteration or repairs.

THE WARRANTIES AND REMEDIES CONTAINED HEREIN ARE EXCLUSIVE AND IN LIEU OF ALL OTHER WARRANTIES EXPRESS OR IMPLIED OR STATUTORY, INCLUDING ANY LIABILITY ARISING UNDER ANY WARRANTY OF MERCHANTABILITY OR FITNESS FOR A PARTICULAR PURPOSE, STATUTORY OR OTHERWISE. THIS WARRANTY GIVES YOU SPECIFIC LEGAL RIGHTS, WHICH MAY VARY FROM STATE TO STATE.

IN NO EVENT SHALL GARMIN BE LIABLE FOR ANY INCIDENTAL, SPECIAL, INDIRECT OR CONSEQUENTIAL DAMAGES, WHETHER RESULTING FROM THE USE, MISUSE OR INABILITY TO USE THIS PRODUCT OR FROM DEFECTS IN THE PRODUCT. Some states do not allow the exclusion of inciden-

17. LIMITED WARRANTY (Continued)

tal or consequential damages, so the above limitations may not apply to you.

GARMIN retains the exclusive right to repair or replace the product or offer a full refund of the purchase price at its sole discretion. **SUCH REMEDY SHALL BE YOUR SOLE AND EXCLUSIVE REMEDY FOR ANY BREACH OF WARRANTY.**

To obtain warranty service, contact your local GARMIN authorized Service Center. For assistance in locating a Service Center near you, call GARMIN Customer Service at one of the numbers shown below.

GARMIN International
1200 East 151st Street
Olathe, Kansas 66062, U.S.A.
Toll free: 1-800-800-1020
Phone: 1-913-397-8200
FAX: 1-913-397-0836

GARMIN (Europe) Ltd.
Unit 5, The Quadrangle
Abbey Park Industrial Estate
Romsey, SO51 9AQ, U.K.
Phone: 44-1794-519944
FAX: 44-1794-519222
Visit our web site at: www.garmin.com

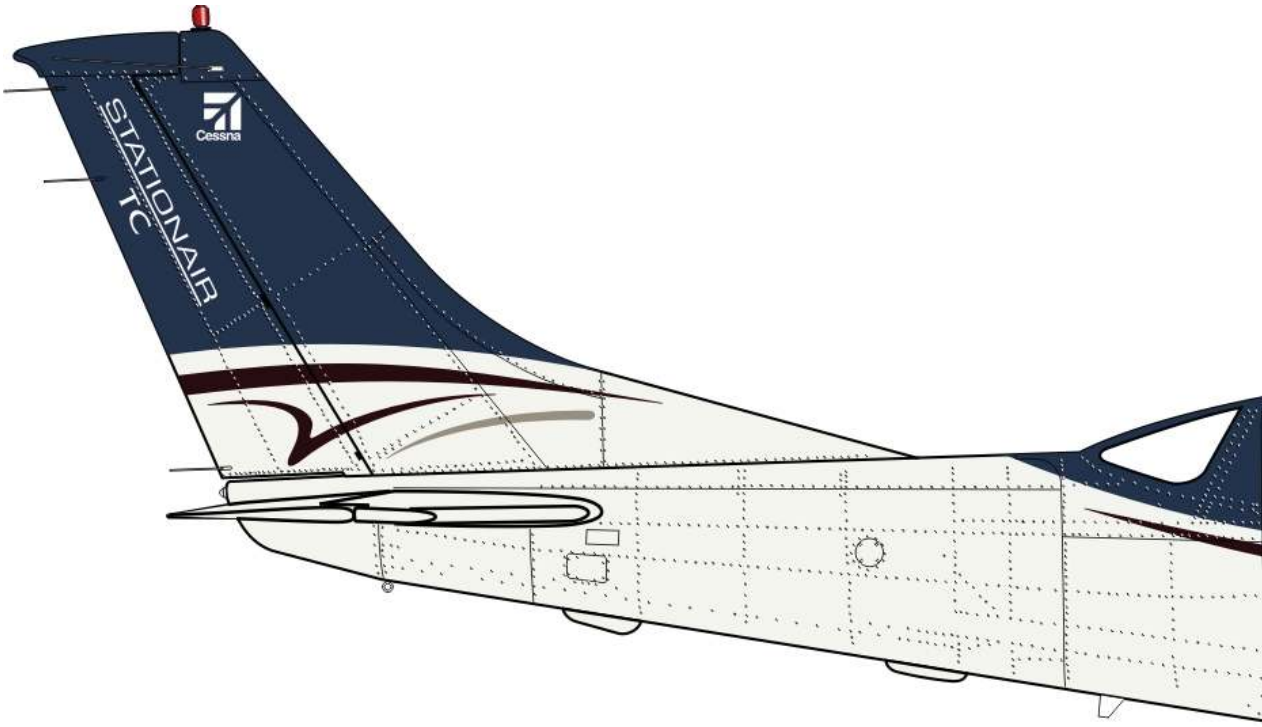
Cessna
STATIONAIR
TC